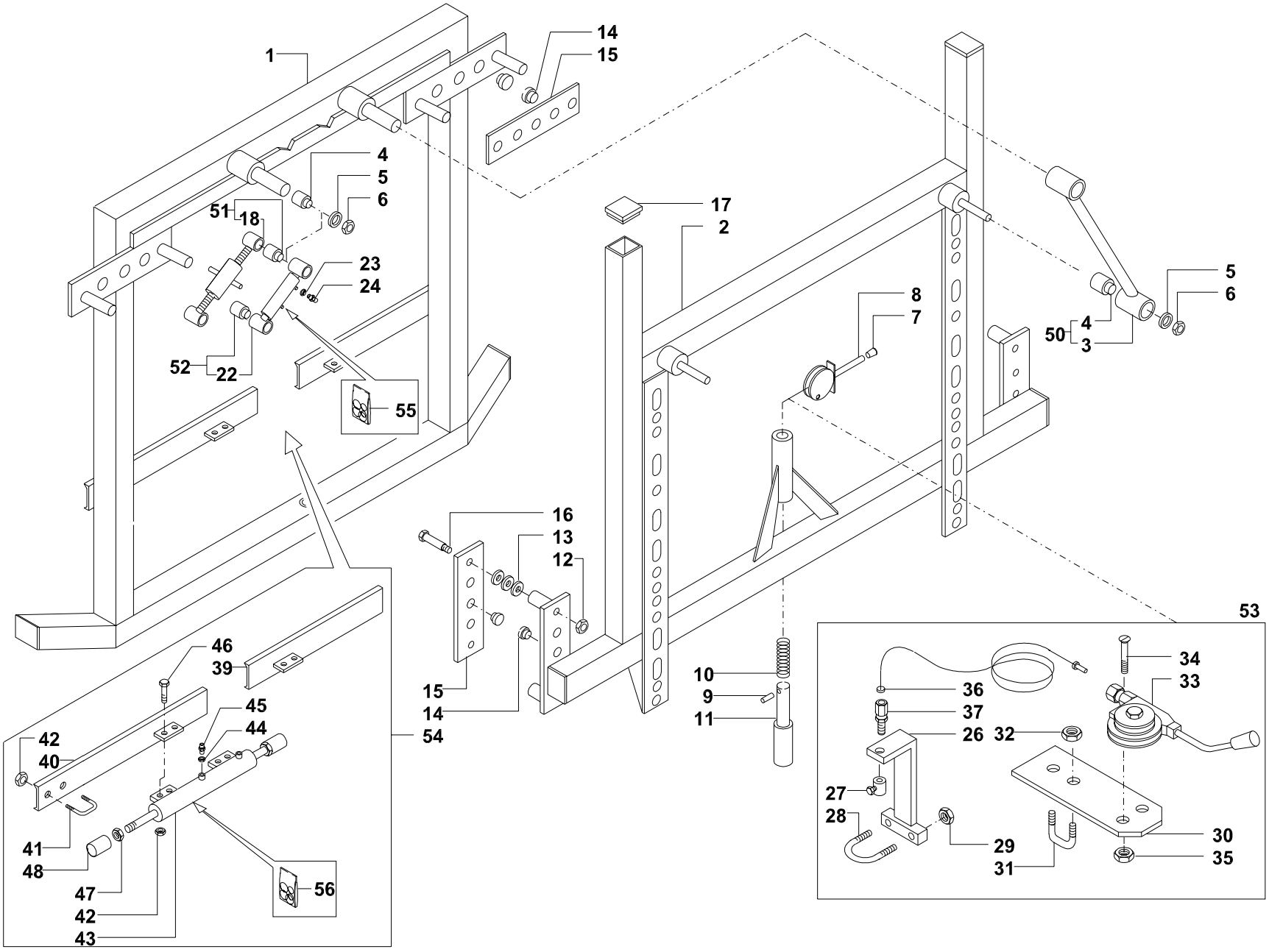

1	GG381100002V	
2	GG381100011V	
3	GG380500021V	
4	GG950300003	
5	GG907116048Z	
6	GG905400016	
7	GG950101010	
8	GG380500033V	
9	GG919800015	
10	GG919900008Z	
11	GG380500039Z	
12	GG905400012	
13	GG911225915	
14	GG950200020	
15	GG380500009V	
16	GG900312085Z	
17	GG950140040	
18	GG380500031Z	
22	GG701632002V	
23	GG600500001	
24	GG570500006Z	
26	GG380500048Z	
27	GG919800046	
28	GG500500030Z	
29	GG905300006	
30	GG380500047V	
31	GG500500002Z	
32	GG905300010	
33	GG920100015	
34	GG900708020Z	
35	GG905400008	
36	GG500700116	L=2550
36a	GG500700126	L=8000
37	GG919800045	
39	GG501100011V	
40	GG501100012V	
41	GG500500001Z	
42	GG905300010	
43	GG702540011V	
44	GG600500001	
45	GG570500011Z	
46	GG900110030Z	
47	GG905100022Z	
48	GG501100007	
50	GG993805002V	
51	GG993805003Z	
52	GG997000006	
53	GG993805001	
54	GG993805009	
55	GG996000203	
56	GG996000178	